REV.	DATE	DETAILS	INIT.
A	3/9/91	RELEASED	
B	27/9/91	OLD NO WAS 20-301-58	
C	4/10/91	Tol. changed to mm. Pin length was 12	

	NAME	DATE
DRAWN	KWK	2-9-91
CHECKED		
APPROVED	BWG	3.9.91
MASTER SAMPLE LOCATION		

LINK CONNECTORS P/L A GORDON GROUP COMPANY

TITLE: BNC CABLE PLUG w STANDARD TERMINATION FOR RG 58 CABLE.

MATERIAL: NOTED

FINISH: NOTED

DRAWING NO.: B10-001

ISSUE: C

REF. DRGS.: 20-301-58

FIRST USE: B10-001

GENERAL TOLERANCE UNLESS OTHERWISE SPECIFIED: Two Fig Decimal ± 0,05 One Fig Decimal ± 0,1 Angles ± 1 Degree

SCALE: ~~1:1~~ ~~2:1~~ ~~4:1~~ ~~6:1~~ ~~10:1~~

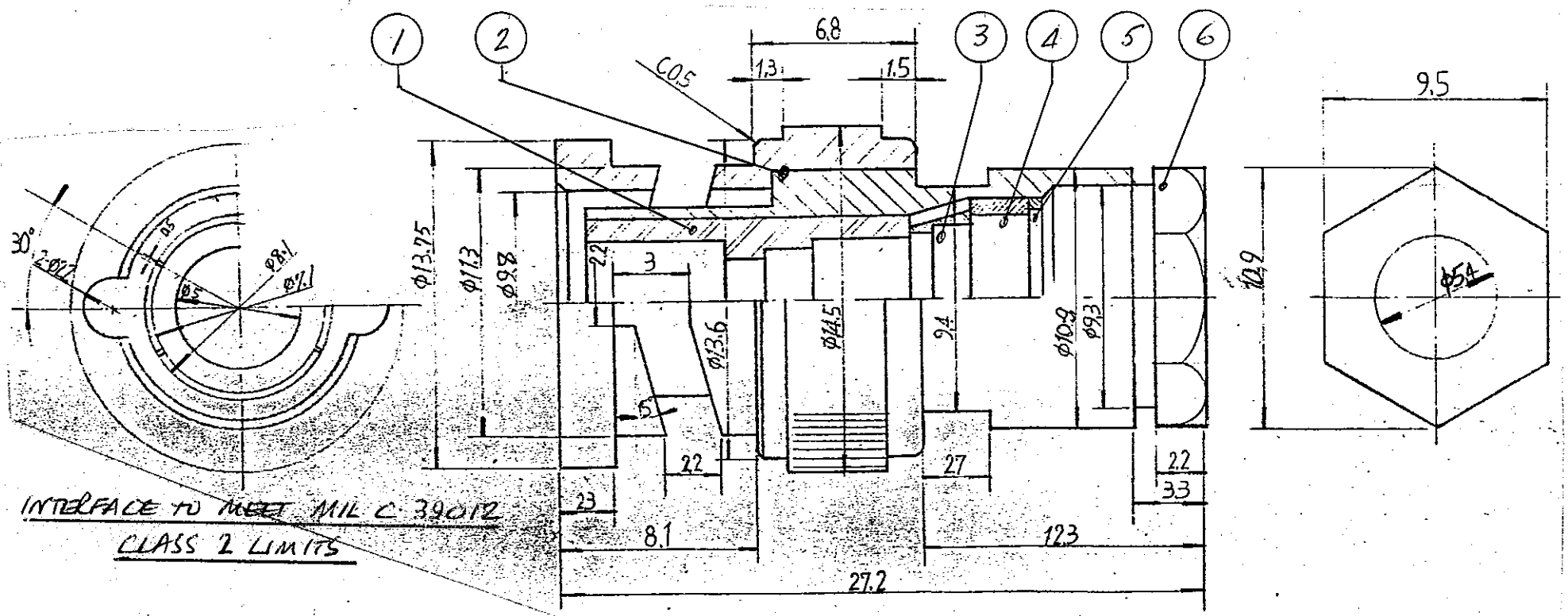

INTERFACE TO MEET MIL C 39012
CLASS 2 LIMITS

KEY	DESCRIPTION	MATERIAL	FINISH	QTY
7	PIN	BRASS	GOLD	1
6	CLAMP NUT	BRASS	NICKEL	1
5	WASHER	BRASS	NICKEL	1
4	CABLE SEAL	RUBBER	BLACK.	1
3	BRAID CONE	BRASS	NICKEL	1
2	BODY ASSEMBLY	BRASS	NICKEL	1
1	INSULATOR	PTFE	NATURAL	1

(12444)

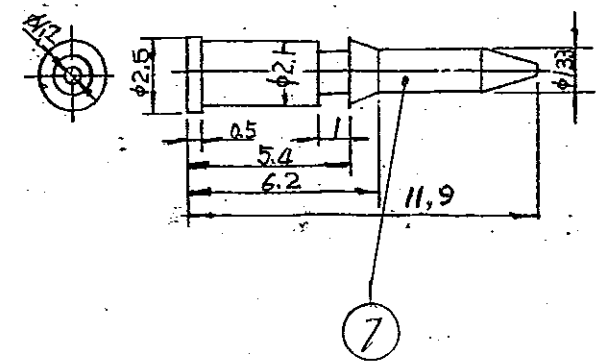

COPYRIGHT RESERVED:
THIS DRAWING IS THE SOLE PROPERTY OF LINK CONNECTORS P/L AND IS RETURNABLE ON REQUEST. IS TO BE TREATED AS CONFIDENTIAL, IS NOT TO BE COMMUNICATED TO ANY OTHER PERSON WITHOUT THE WRITTEN CONSENT OF LINK CONNECTORS AND MAY BE USED FOR MANUFACTURE ONLY WHEN ACCOMPANIED BY A WRITTEN ORDER.